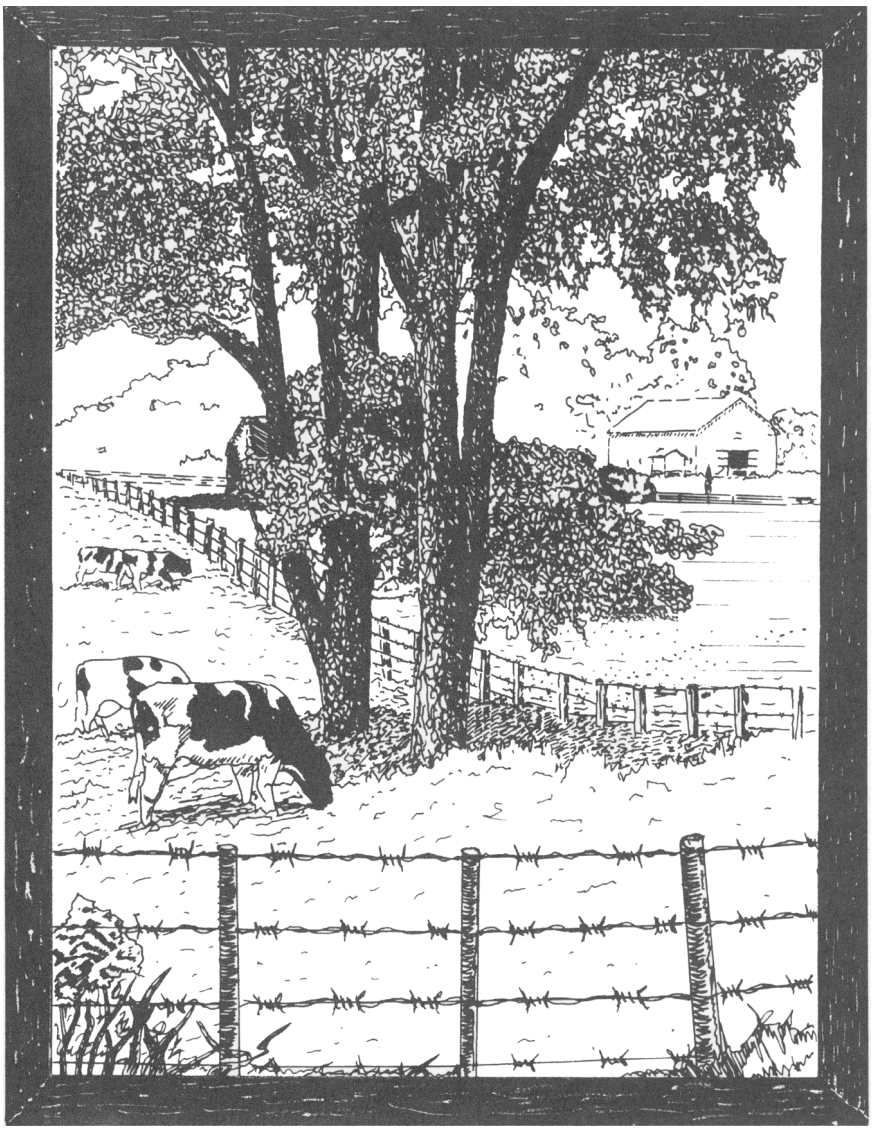

# FENCES

## For the Farm

Cooperative Extension Service ◻ The University of Georgia
College of Agricultural and Environmental Sciences

# Table of Contents

**Planning the Fence** . . . . . 3
Sketch Map of Your Farm . . . . . 3
Add Land Capability to Map . . . . . 3
Locating Lanes and Gates . . . . . 4
Locating Permanent Fences . . . . . 4
Locating Temporary Fences . . . . . 4
**Selecting the Fence** . . . . . 5
Rail Fences . . . . . 5
Barbed Wire Fences . . . . . 5
Woven Wire Fences . . . . . 6
Cable Wire Fences . . . . . 6
Mesh Wire Fences . . . . . 7
High-Tensile Wire Fences . . . . . 7
Electric Fences . . . . . 7
Comparison of Fence Types . . . . . 8
**Fencing Materials** . . . . . 8
Wire . . . . . 8
Staples . . . . . 8
Fence Posts . . . . . 8
Electric Fence Controllers . . . . . 11
**Construction** . . . . . 11
Establishing the Fence Line . . . . . 11
End, Corner, and Gate Post Brace Assemblies . . . . . 12
Fence Post Setting . . . . . 12
Installing Wire on Fences . . . . . 14
Electric Fence Controllers . . . . . 14
Gates and Cattleguards . . . . . 14
Maintenance . . . . . 15
**References** . . . . . 15

# Fences for the Farm

*John W. Worley*
*Biological and Agricultural Engineering Department*
*College of Agricultural and Environmental Sciences*
*Cooperative Extension Service*

Fences may be used to protect or divide property, to improve its appearance, to confine animals, or to exclude animals. Whatever its purpose, one should plan a fence carefully. This is especially important on farms where fences represent a large investment and their location and arrangement may affect production efficiency.

Permanent fences — those intended to last for many years with minimal repairs — should be well constructed and made of good materials. Temporary fences — those intended to stay in place only a short time — need not be so sturdily constructed and may be made of less expensive materials. Whether you select permanent or temporary fencing, careful consideration of uses and proper maintenance is necessary.

## Planning the Fence

Fencing is a long term investment. Good fences should last from 25 to 50 years. Planning is the key to good fencing. This is true whether fencing an area for the first time or replacing old, worn-out fences. If present fences are in good shape you may want to develop plans around them. But look ahead to the day when these fences, too, may have to be replaced. It is not wise to construct new divider fences if boundary fences are in disrepair and failing.

### Sketch Map of Your Farm

The easiest way to prepare a sketch of your farm is to start with an aerial photograph. A good aerial photo shows details of the present farm layout, plus some indications of the lay of the land. Aerial photographs have been made of practically all farming areas. You can get one that includes your farm from the Farm Service Agency (formerly Agricultural Stabilization and Conservation Service) or your local tax office. You can also obtain one from any commercial aerial survey firm listed in the classified section of telephone directories in major cities.

### Add Land Capability to Map

This step may already be complete if your land is in a Soil Conservation District. Land capability maps, available from the Natural Resources Conservation Service (formerly Soil Conservation Service), generally show types of land and spell out use and management plans for the farm (Figure 1).

If an NRCS plan is not available for your farm, use the sketch of your land which you previously obtained. Divide your land into areas that are best suited for: (1) permanent pastures or hay production, (2) woodlands not to be pastured, (3) woodlands that can be pastured and (4) cultivated crop production (Figure 2, page 4). These land assignments are made based on uses that will return the greatest possible profit for each type of land.

Consider the following points when developing your plan. If possible, locate fences in terraced fields at terrace's crest and other natural water divides. Avoid running your fences down-slope across terraces. If your field needs to be cross-fenced, try to plan a contour fence parallel to a terraced ridge. If a fence must be located at the outlet end of a terrace, allow for a fence location that will not block the outlet water movement from channels.

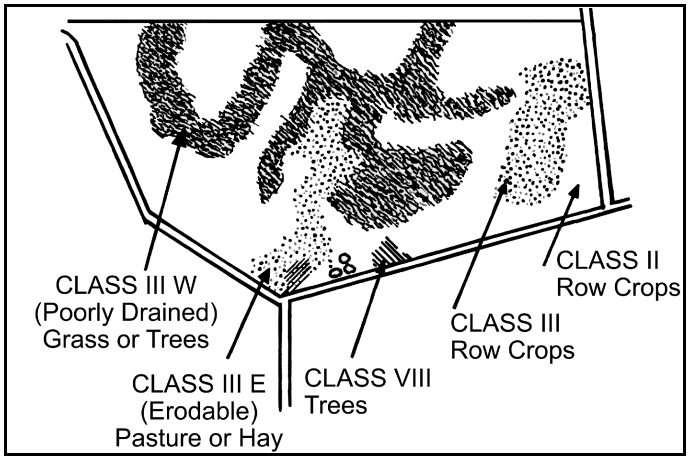


Figure 1. A land capability map will look something like this if prepared by the Natural Resources Conservation Service.

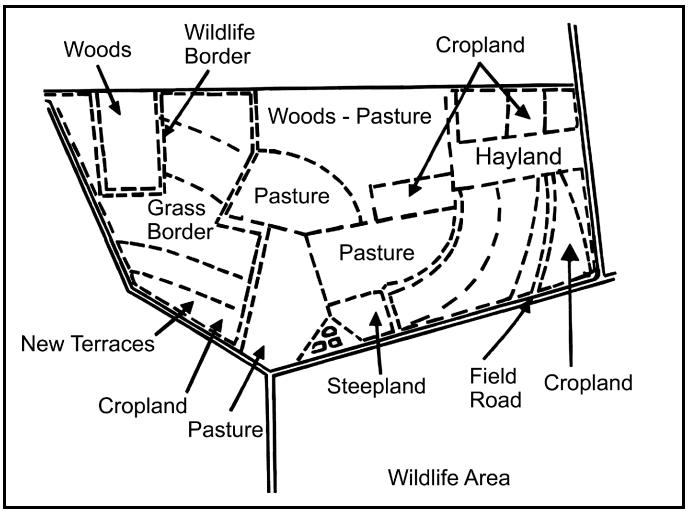


Figure 2. Land capability layout.

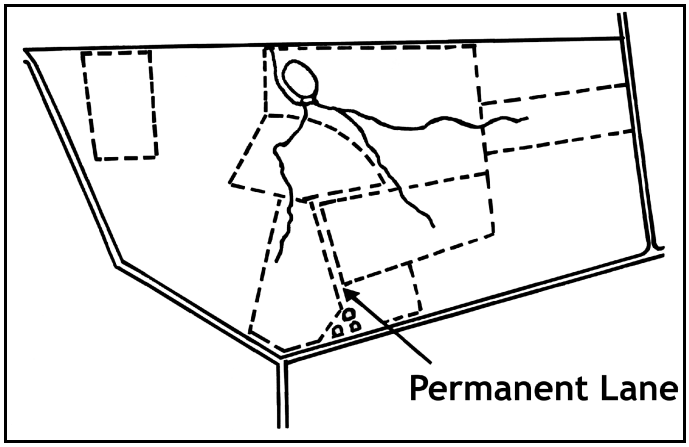


Figure 3. Locate permanent lanes to avoid erosion yet allow access to as many fields as possible.

Pastures located at the end of terraced land provide good grass receiving areas for excess water flow. Wherever possible, plan for straight fences; they are cheaper and easier to build.

## Locating Lanes and Gates

Ideally, a lane should connect livestock buildings and working pens with every field that eventually may be pastured (Figure 3). Keep in mind that a permanent pasture located between other fields can be considered a lane itself.

Locate lanes in the driest areas possible, such as along a terrace or natural ridge; otherwise gullies may develop after repeated use. If a well-drained location is impossible, plan on movable lane fences which can be relocated after a year or two. If lanes are used frequently, it may be desirable to grade the area and install geotech fabric covered with six inches of compacted crusher-run gravel in the lane. Specifications for such "heavy use areas" can be found at your local NRCS office. They can be installed for about half the price of concrete.

Wherever possible, locate gates and passageways for livestock and equipment in the corner of each field closest to farm buildings. If you have fields on opposite sides of a road or highway, locate gates opposite each other so livestock can go directly across.

## Locating Permanent Fences

First, a permanent fence around the farm boundary is highly desirable. This will establish a fixed property line between you and your neighbor. It will also help confine your livestock to protect both them and the driving public from possible highway collisions. If a fence around the entire boundary is not affordable, then install the parts which are most helpful in your operations. Other boundary fences can be added at a later date.

Next, permanent pastures which will be used year after year also deserve high priority in fencing plans. Plan to fence ponds, also, to control livestock access. Since these fences are not apt to be moved, plan for well built, low-maintenance construction. If the plan includes a lane that gives livestock access to water, this fence should also have high priority. Livestock may enter and damage a well managed timber stand if there are gaps in surrounding fences. Such fences should have a high priority.

Also consider permanent fencing for cultivated fields used for pasture. If you follow the practice of "hogging" corn or peanuts, or of turning your livestock into a field for "grazing down" after it has been harvested, a permanent fence is highly desirable. With careful study, temporary or movable fences such as electric fences may do the job economically and effectively around cultivated fields. However, movable fences usually don't last more than three years and may not be economical replacements for permanent fences.

## Locating Temporary Fences

Temporary fences are intended for use over a period of a few weeks or months. After that they will be removed and used in some other location or stored until needed.

Movable fences cost less to build than permanent fences, but they are not as effective and will not last more than one to three years the way most of them are built. They do not take the place of permanent fences, but can be very beneficial in some instances.

Movable fences have a definite place in any livestock program. They can be used temporarily in place of permanent fences until you can afford permanent fencing. They can be relocated from year to year until you

decide what field layout best fits your needs. They are easily moved to allow pastures to be rotated and are especially desirable for intensive rotational grazing programs. They can also help adjust the size of a temporary pasture to the amount of livestock being grazed.

# Selecting the Fence

Now that you have your fencing plan laid out, your next job will be to decide what kind of permanent or movable fence to select. The kinds of fences commonly used on farms include board, barbed wire, woven wire, cable, mesh, high-tensile, electric or a combination of any of these.

The type of fence that you will need depends on the livestock, crops, and other vegetation that border the fence. Horses will run through a fence or get tangled in it causing harm to themselves. Cattle will crawl over fences, sheep try to crawl under. Hogs, of course, try to root their way under a fence. Any livestock will put a fence to its greatest test when there is a lush green crop on the opposite side.

## Rail Fences

Rail fences are typically used as border fences around farm buildings or the home. They are also popular on horse farms where expensive show-animals are confined. Today, many choices are available for building board fences including PVC plastic, vinyl coated wooden boards, treated wood, and painted wood. PVC plastic fences are not as strong as wood and cost more, but they are very attractive and do not require painting since they are the same color all through the material. White PVC boards may require periodic washing with mildew removing agents, especially in the humid South. Numerous heights of board fences are possible, but 4 to 5 feet are most common for livestock. The cost of lumber, nails, paint and other materials along with labor is generally higher for rail fences than for most other fences.

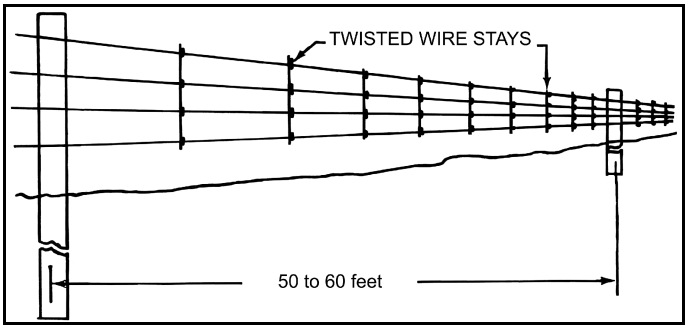

Figure 5. Typical barbed wire suspension fence.

One type of fence that has the appearance of a rail fence, but is actually a wire fence is called a high-tensile polymer fence. The "rails" consist of vinyl plastic 4 to 6 inches wide with two to three high-tensile steel wires encased. It is less expensive than a rail fence, is very strong, and has a nice appearance and good visibility, but the wires must be tightened once or twice per year to maintain the proper tension. (This is true of any high-tensile fence.)

## Barbed Wire Fences

Barbed wire fences are generally classified in two categories: standard barbed wire fences and suspension barbed wire fences.

**Standard barbed wire fences** (Figure 4) usually have posts spaced 10 to 12 feet apart and use three to five strands of wire.

**Suspension barbed wire fences** (Figure 5) consist of four to six strands of barbed wire. Each strand is stretched *taut* so there is no more than three inches sag between posts. The suspended barbed wires are held apart by twisted wire stays or short pieces of fiberglass posts spaced approximately 10 to 12 feet apart. Line posts are spaced from 50 to 60 feet apart. The suspen-

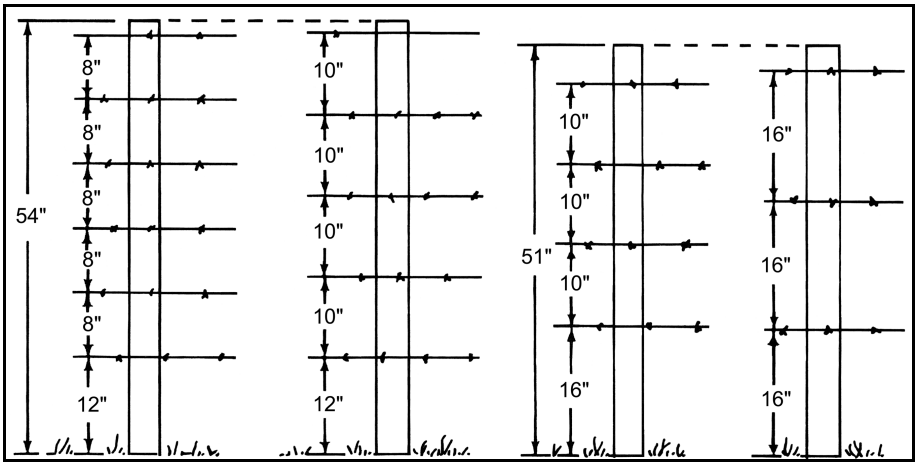

Figure 4. Common spacings of wire in barbed wire fences.

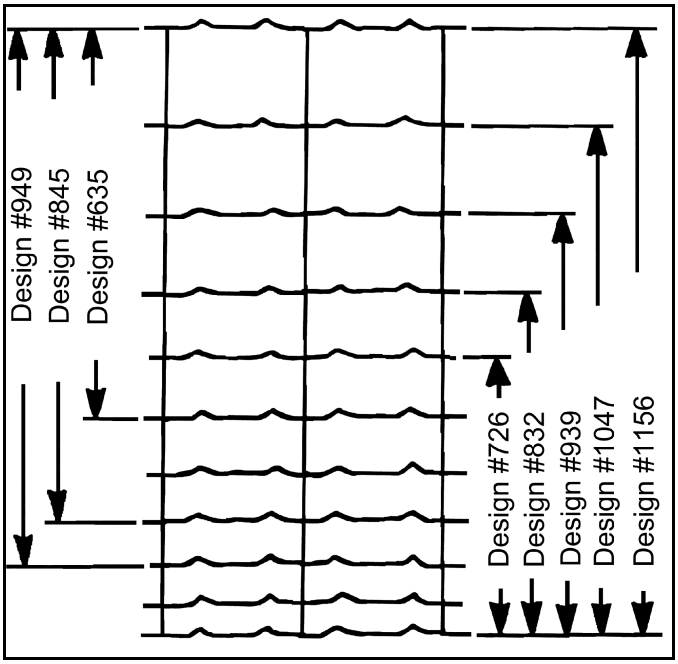


Figure 6. Some common woven wire designs. Standard design numbers describe the wire: 949-12-11, for instance, means the fence has 9 horizontal wires and is 49 inches high; has 12-inch spacing of stay (vertical) wires and 11-gauge stay and intermediate wires. (Top and bottom wires are usually two sizes larger.)

sion barbed wire fence sways back and forth in the wind or when animals hit it. The swaying motion helps keep animals away from the fence and discourages them from fighting through it. For this reason the lower end of the stays must not touch the ground or the effectiveness of the suspension fence will be reduced.

## Woven Wire Fences

Woven wire fences consist of a number of horizontal lines of smooth wire held apart by vertical wires called stays. Spacing between horizontal line wires may vary from as close as $1^1/_2$ inches at the bottom for small animals to 9 inches at the top for large animals. Spacing of the wires generally gets wider as the fence gets higher.

Stay wires are spaced 6 inches apart for small animals and 12 inches for large animals. The height of most woven wire fencing materials ranges from 26 to 48 inches. The height needed will depend on the size and jumping ability of the animals. Many combinations of wire sizes and spacing as well as a number of fence heights are available. Standard woven wire fence designs are shown in Figure 6.

## Cable Wire Fences

These fences usually consist of $^3/_8$-inch smooth, steel wire cables stretched from one anchor post to another (Figure 7). Each cable is normally made out of seven strands of wire twisted together. Heavy springs are placed at one end of each cable to absorb any shock on the wires. The other end is rigidly attached to the next anchor post. Cables are usually passed through holes in wooden posts. If other kinds of line posts are used, cables are attached to them with heavy wires. A fence may have as many cables as desired, however, a six cable fence is common. Spacing between wires depends upon the kind of animal to be confined. Cable wire fences are expensive, thus they are mostly used for confinement areas such as holding pens, feed lots or corrals.

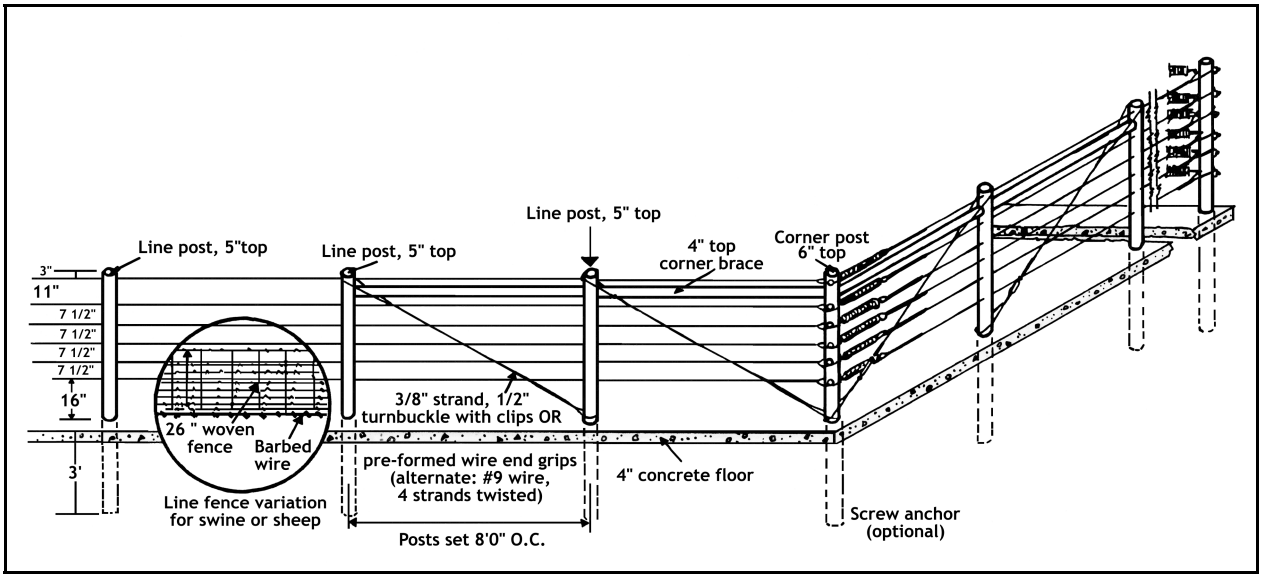


Figure 7. Cable fence — one type of installation.

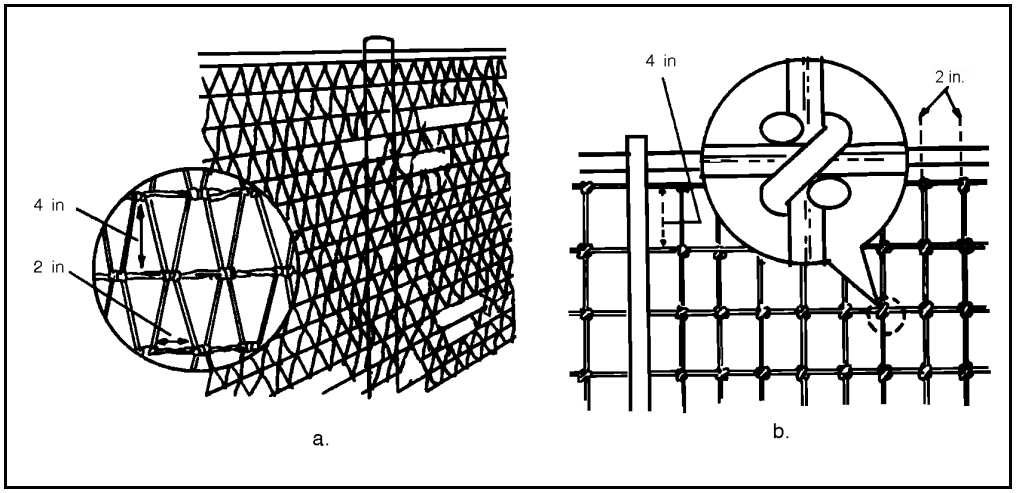

Figure 8.a. - Detail of diamond-mesh fence; b. - Stiff-stay, square-knot fence design.

## Mesh Wire Fences

Mesh wire fences are strong and provide great safety to animals. They are replacing wood board fencing in many areas, but are even more expensive than good woven wire. Because of the cost they are used primarily for confinement fencing such as that around corrals, feed lots, or small crop acreage areas. They also make an excellent large area fence for valuable horses. They have small openings so horses don't tend to get their hooves caught in them, and they have no exposed sharp wire ends to cut an animal. Two types of mesh wire are the diamond mesh (Figure 8a), which uses two wires twisted together in a diamond formation, and the square knot mesh (Figure 8b), which has single horizontal lines with the wire spaced 2 to 4 inches apart.

## High-Tensile Wire Fences

High-tensile wire fences potentially have longer life and lower costs than conventional fences. Single, smooth wires are held in tension between pressure-treated wood end-post assemblies with a combination of posts and battens or droppers to keep the wires properly spaced between posts. Tension in the wire is maintained by permanent in-line stretchers and tension springs. Best results are achieved when tensioners are used in conjunction with springs. Attach wires to any intermediate posts in such a way that they can move laterally and be retensioned. Wires should be retensioned at least once or twice per year. Commonly one to five or more strands of high-tensile wire are used in a fence. It is recommended that one or more of the strands be electrified in order to prevent animals from scratching on the battens and thus moving them out of position. If this happens, it could result in long unsupported lengths of wires, allowing animals to get through the fence.

If properly designed and constructed, high-tensile smooth wire fencing has many advantages. It is easier to handle, safer for livestock, easily adapted to specific needs, has longer life, requires little maintenance, causes minimum damage to livestock hides, has a neat appearance and gives better livestock restraint and predator control when electrified.

Figure 9 shows a typical five-wire high-tensile fence with in-line wire tensioners.

## Electric Fences

Electric fences can be built for temporary or permanent use. In addition, a strand of electrified wire added to other types of fence usually improves their effectiveness tremendously. The temporary or movable fence is usually made with one or two strands of smooth wire or a rope or tape with small electric wires woven into it. Tape or rope is more flexible than smooth wire and much easier to handle and move from one location to another. It is also more visible, an important factor when a fence is to be moved periodically to new locations

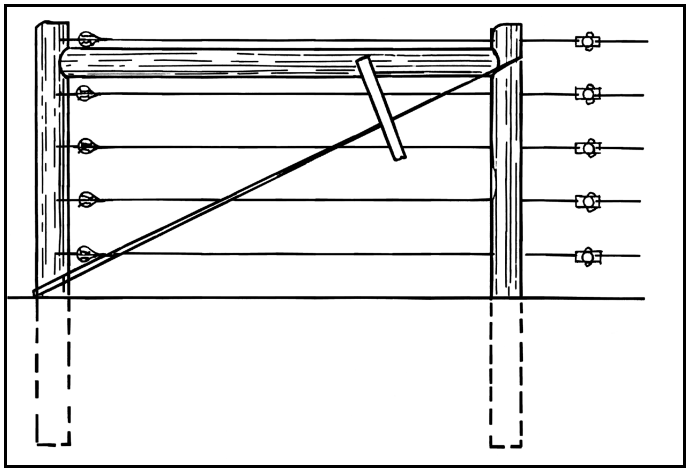
Figure 9. Typical high-tensile fence brace and wire tensioner location.

where livestock are not used to seeing it. An electric fence controller is used to energize the wires. The moist earth is used to allow the current to return to the controller. Alternatively, one strand of wire can be grounded, so that the circuit can be completed even when the earth is very dry and thus a poor conductor. Corners and end posts in temporary electric fences require less bracing than permanent fencing. Line posts may be small with wide spacing since the fence will generally be used for a short period of time.

Permanent electric fences may also be built. These fences have from two to eight smooth wires placed on stronger posts. Instead of using the earth for a return path, many electric fences use alternate wires as the hot wire and the grounded return to the charger. This arrangement enables a completed circuit when an animal touches any two adjacent wires and improves the performance of the fence tremendously in drought conditions. Cost of permanent electric fence is much less than that of comparable barbed or woven wire fences. Some of the advantages of electric fencing are low initial cost, low operating cost, and portability. They can be used to protect or extend the use of old permanent fences and they can be used to protect livestock or poultry from many predators.

There are a few disadvantages, however. A home-built unit can be highly dangerous. Only approved fence chargers should be used. Livestock will require training when first using electric fences. The electric fence charger must be operated full time, especially with cattle and sheep. Also, if no return ground wires are used, electric fences may not be effective in dry weather. This is especially true if the controller is not well grounded. Another potential problem is that the charged wire may short-circuit and become ineffective if heavy vegetation is allowed to contact the wires. It is imperative that electric fences be inspected and that vegetation be controlled in order to minimize short circuiting. For this reason, an electric fence may not be a good choice near wooded or swampy areas with heavy vegetative growth.

## Comparison of Fence Types

As previously states, the type of fence needed depends on livestock, border crops, predators and other factors – including cost. Table 1 (page 9) shows some general comparisons for use when selecting a fence.

# Fencing Materials

## Wire

Wire is covered with zinc, commonly called galvanizing, to protect it from rusting. The length of time before wire begins to rust depends on the weather but also on the thickness of the zinc coating. More zinc means more years of service before rusting starts. Fence manufacturers and the American Society for Testing Materials have established "classes" of zinc coatings for fence wire. Class 1 has the lightest coating of zinc and Class 3 has the heaviest (two to three times as much, depending on the wire size). The expected life of a fence depends on many factors, but Class 3 galvanizing can easily add 5 to 10 years of life to fence wire in a humid climate like Georgia's.

Because of competition, many suppliers of fencing materials only stock Class 1 fencing or a limited number of products in Class 3. Commonly, a light gauge Class 3 barbed wire is stocked along with a heavier gauge Class 1 barbed wire since both of these products sell for about the same price. Other products with Class 3 galvanizing may have to be special ordered, but it is usually worth the extra cost and effort, especially in the humid southeastern climate. If consumers demand a higher quality product, dealers will certainly supply that need.

## Staples

Selecting the appropriate staple is just as important to the overall strength and longevity of the fence as selecting the right wire. Staple pull-out is a common fencing problem when using softwood posts. To avoid this problem, use $1^3/_4$-inch or 2-inch long, 8- or 9-gauge, hot-dipped, galvanized staples with cut points and barbs. If using hardwood posts, shorter staples can be used because they cannot be pulled out of hardwood as easily.

## Fence Posts

Wooden posts are plentiful in Georgia. Some major advantages of wood posts are strength and resistance to bending, misalignment and withdrawal. Permanent fences will require decay resistant fence posts. The most common wooden posts are pine pressure treated with CCA (chromated copper arsenate.) These posts have a greenish color, and they last longer and are harder than older treatments such as creosote and Penta (pentachlorophenol.) This quality of hardness tends to help prevent staples from being pulled out. Some native, untreated trees are still used to a limited extent for fence posts. Table 2 (page 10) shows the life expectancy of different tree varieties when used as fence posts.

Table 1. Comparison of Common Fences

| Types | Comparative Cost Index[1] (Material Only) | Approximate Life[2] (Humid Climate) - yrs | Upkeep |
|---|---|---|---|
| **A. PERMANENT TYPES** | | | |
| **4-Rail** (Posts spaced 8 feet) | | | |
| 1" x 6" Treated Boards | 200 | 10-20 | Medium |
| 2" x 6" Treated Boards | 350 | 10-20 | Medium |
| PVC Rails | 500-600 | 20 | Low |
| **High-Tensile Polymer Coated** | | | |
| 5-inch rail width | 330 | 33 | Medium |
| **Barbed-Wire Fencing** (One post per 10 feet) | | | |
| 5 strands | 35 | 33 | High |
| **Suspension Fencing** (Posts 50 feet apart) | | | |
| 5 strands | 25 | 33 | Medium |
| **Woven Wire Fencing** | | | |
| 39-inch with 2 strands barbed wire | 75 | 33 | Medium |
| **Cable Fence** | | | |
| 5 cable (5') | 500 | 30 | Low |
| **Mesh Wire** | | | |
| $12^1/_2$ gage | 150 | 38 | Low |
| **Permanent Electric**[3] - ($12^1/_2$ gage) **and High-Tensile Fences** | | | |
| 4 strands | 20 | 25 | Medium |
| **B. MOVEABLE ELECTRIC FENCES**[3] | | | |
| **Steel Wire** (Smooth, 1-strand) | | | |
| 12 gage | 7 | 33 | High |
| **Reflective Tape or Rope** | | | |
| $^1/_2$-inch | 11 | 30+ | Medium |

[1] Cost index figures are to show relative cost, not actual costs. For example, fence with an index figure 25 costs about twice as much per foot as a fence with an index figure of 12.

[2] Fence life based on combination of post and wire life expectancy.

[3] Costs of electric controller not included.

Wood posts from $5^1/_2$ to $8^1/_2$ feet long and from $2^1/_2$ to 8 inches or larger diameter are readily available. The larger the top diameter, the stronger the post. Line posts can be as small as $2^1/_2$ inches, but larger ones will provide for a stronger, more durable fence. Corner and gate posts should have a top diameter of at least 8 inches. Brace posts should be 5 inches or more in diameter.

Be careful when buying wooden posts that the posts are properly treated for contact with the soil. Most treated lumber (including 4-by-4s often used as posts) bought in builder's supply stores is treated at 0.25 lb of CCA per cubic foot of lumber. This level of treatment will not protect against termites. Sawn lumber should be treated at 0.5 to 0.6 lb/ft$^3$ of CCA if it is to be in contact with the earth. Fence posts can be treated at 0.4 lb/ft$^3$. Many people are tempted to use "landscape timbers" for fence posts because they are extremely cheap at times due to over-supply. These timbers are a byproduct of the plywood industry. They are what is left after the veneer has been peeled off of a large log. The danger in using these for fence posts is that many times they are not treated for ground contact since they are not designed to support a load and sometimes are not labeled, so it is unclear what, if any, treatment has been applied.

Steel posts have four major advantages. They cost less, weigh less, can be driven into the ground rather easily, and are fireproof. They also help ground the fence against lightning when the soil is moist. Steel posts vary from 5 to 8 feet long. A wide variety of steel posts are available with widely varying prices and quality, so be careful when comparison shopping to make sure you are comparing equal quality posts. Steel posts do not have as much strength against bending as wood posts. Wooden line posts can be placed every 50 to 75 feet to help keep steel posts from bending and improve fence stability.

Various kinds of posts are available for electric fence line posts as the requirements for strength are much less than for nonelectric fences. Posts are available in wood, plastic, steel, and fiberglass. Wood and steel posts require insulators to prevent short-circuiting the fence through the posts. Where available, high-density fiberglass posts (commonly known as *sucker rod*) make excellent electric fence posts. These posts are byproducts of the oil industry and are not always available. They are usually gray in color, are very strong and durable and are nonconducting, so insulators are not required.

All posts must be long enough for the fence height and depth of setting. Add together the height of the top wire above the ground, the depth of the post in the ground, and 6 extra inches to get the desired length.

**Table 2. Life Expectancy of Wood Fence Posts**

| Type of Wood | Untreated | Treated | Type of Wood | Untreated | Treated |
|---|---|---|---|---|---|
| Ash | 3-7 | 10-15 | Larch | 3-7 | 10-20 |
| Aspen | 2-3 | 15-20 | Maple | 2-4 | 15-20 |
| Bald Cyprus | 7-15 | 20-25 | Oak (red) | 5 | 15 |
| Balsam Fir | 4-6 | 10-15 | Oak (white) | 10 | 15-20 |
| Basswood | 2-3 | 15-20 | Osage Orange | 20-25 | Not necessary |
| Beech | 3-7 | 15 | Pine | 3-7 | 25-30 |
| Birch | 2-4 | 10-20 | Red Cedar | 15-20 | 20-25 |
| Black Locust | 20-25 | Not necessary | Red Mulberry | 7-15 | 15-30 |
| Box Elder | 2-7 | 15-20 | Redwood | 10-15 | 20-30 |
| Butternut | 2-7 | 15-20 | Sassafras | 10-15 | 20-25 |
| Catalpa | 8-14 | 20-25 | Spruce | 3-7 | 10-20 |
| Cedar | 15-20 | 20-25 | Sweetbay | 2-6 | 10-20 |
| Cotton Wood | 2-6 | 10-15 | Sweetgum | 3-6 | 20-30 |
| Douglas Fir | 3-7 | 15-18 | Sycamore | 2-7 | 20-25 |
| Elm | 4 | 15 | Tamarack | 7-10 | 15-20 |
| Hackberry | 3-7 | 10-17 | Tupello (black) | 3-7 | 15-20 |
| Hemlock | 3-6 | 10-25 | Willow | 2-6 | 15-20 |
| Hickory | 5-7 | 15-20 | Yellow Poplar | 3-7 | 20-25 |
| Honey Locust | 3-7 | 10-20 | | | |

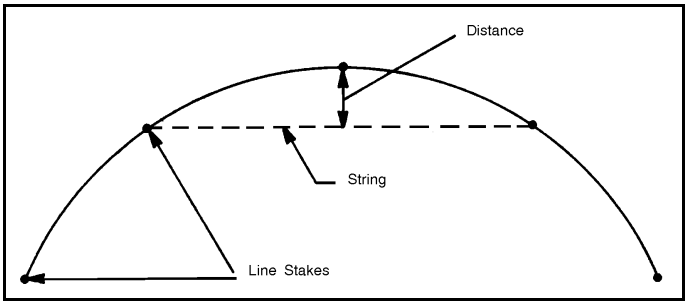

Figure 10. Fence post spacing around curves.

## Electric Fence Controllers

Most people will agree that touching an electric fence is a very unpleasant experience. The experience for animals is no different. When animals come in contact with an electric fence, the shock they receive affects their nervous systems. The severity of the shock depends on the voltage and amperage, as well as the duration of the shock and the sensitivity of the animal. It takes at least 700 volts to effectively control short-haired breeds of cattle, pigs, and horses and around 2000 volts for long-haired cattle, sheep, and goats. The controller, sometimes called the charger or energizer, that delivers this shock is the heart of any electric fence and should be selected carefully.

The thing that makes controllers safe yet effective is the short duration of the charge. The charge is powerful, yet does not last long enough to damage the heart or to cause electrical burns. Modern low-impedance controllers have the capacity to power long distances of multi-wire fences and are not affected as much as earlier controllers by some contact with grass or other vegetation.

Controllers are available in battery powered models as well as 120-volt AC models. When 120-volt power is available, the 120-volt models have the obvious advantage since batteries do not have to be purchased or recharged. Cost of operation is minimal (usually less than $1 per month) for these units. If commercial power is not available near the fence to be energized, battery-powered units are available to fill this need. These units operate on 12, 24, or 36 volts (one, two, or three 12-volt batteries in series). The batteries must be recharged every 2 to 6 weeks depending on the system and amount of use. Solar collectors are also available to recharge the batteries daily. Deep-cycle, marine and RV type batteries are best suited for battery-operated controllers. Batteries designed for use in automobiles will not last as long as deep-cycle batteries.

It is important to match the capacity of the controller to the fence you want to charge. Most manufacturers indicate the strength of the unit by the number of miles it will power. A good rule of thumb for sizing controllers is to determine the number of miles of electrified wire in the fence and add 25 percent to offset any power drain caused by vegetation touching the fence. For example, if you have 4 miles of five-strand high-tensile wire with three of the strands electrified, you would need a controller rated for at least 15 miles (3 wires x 4 miles = 12 miles + 25% = 15 miles.)

# Construction

Like most construction and maintenance jobs around the farm, fence construction requires proper techniques and common-sense judgement. Every fencing job presents slightly different problems. A few basic principles are good starting points for every fencing job. Here are some to consider.

## Establishing the Fence Line

Where a permanent fence is installed on a property line, make sure of the exact location of property lines. A mistake here can be very costly. Once this is done and any trees and brush are removed, you are ready to establish the fence line.

On level ground, an end post can be installed at each end of the run and a string or a single strand of wire stretched between the two posts to establish the line. On rolling ground where hills are too high to sight from one end-post to the next, surveying equipment can be used if available to establish the location of intermediate points on the line. Alternatively, intermediate sighting stakes can be driven at the tops of hills. Two of these temporary stakes should be driven about 8 to 10 feet apart at the approximate position where the line will cross the crest of the hill. If both posts appear to be lined up when sighted from each end post, they represent a true midpoint of the line. If not, they can be moved back and forth until they are properly aligned.

When the fence must go around a curve, place small stakes every 16 feet around the smooth curve. Then start figuring the post hole positions where the curve is greatest. The sharper the curve, the closer the posts should be. Select three stakes at a point of maximum curvature. String a line from the first to the third stake (Figure 10). Measure the distance from the center stake to the string, and space the posts as given in Table 3.

Table 3. Fence Post Spacing Around Curves

| Distance from Center Stake to String | Post Spacing |
|---|---|
| *Inches* | *Feet* |
| 8 or less | 12 |
| 8 to 14 | 10 |
| 14 to 20 | 8 |

## End, Corner, and Gate Post Brace Assemblies

For any wire fence, corner-post and end-post assemblies are probably the most important structures in the entire fence. They are the foundation upon which the fence is built. When wire is first stretched, the pulling force on a corner or end may be 3000 pounds. Winter cold can cause contraction of wire which increases that force to 4500 pounds. Both corner and end assemblies must be strong enough to withstand these forces.

Figure 11 shows proper construction of a double span **H**-brace assembly for wooden anchor posts. A double span assembly is more than twice as strong as a single span; use it whenever the fence span will be more than 200 feet long. A corner post will need a brace assembly for each fence line leading to it. Post depths shown in Figure 11 are minimums. Use deeper settings for sand or wet soil conditions. Figure 12 shows the proper way to secure brace wire.

When a fence is more than 650 feet between corner posts, use braced line post assemblies every 650 feet in the fence line. A braced line assembly is the same as a single span braced corner except that a second diagonal brace wire is used to take fence pull in the opposite direction.

Figure 13 (page 13) illustrates anchor and brace locations for fences. Steel corner post and brace assemblies can be used in place of wood assemblies. The steel posts should be set in concrete anchors. Corner post anchors should be 20 inches square and $3^1/_2$ feet deep. Braces are anchored in 20-square-inch blocks that are 2 feet deep.

There are some other brace assemblies that are not as strong as the **H**-brace, but will work in many cases for short pulls and in favorable soil conditions. One is commonly called a "dead man" brace (Figure 14, page 13).

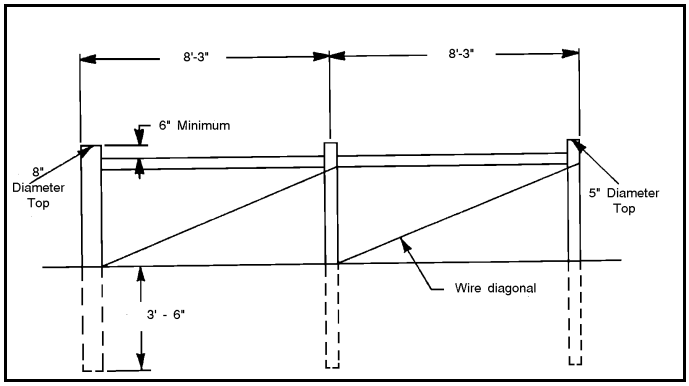


Figure 11. Double span brace post assembly. Post depths shown are considered to be minimum.

The end post should be a large (10-12") post at least 4 feet in the ground. The "dead man" is a short (4 foot) piece of post buried just under the surface perpendicular to the end post on the loaded side. This positioning supports the post such that when the post tries to lean, it must push the "dead man" through the soil sideways.

A second type of brace, called an angle brace, is shown in Figure 15 (page 13). The keys to making this brace work are (1) making sure the end post is deep in the ground (about 4 feet), (2) placing a 1 to 2 square foot rock or piece of concrete under the angle brace post, and (3) properly tensioning the tension wire. It is the tension wire that gives this brace its strength, not the angle post. If the fence starts to sag, it can usually be tightened by retensioning the tension wire.

## Fence Post Setting

Steel posts are almost always hand or power driven. Wood posts are frequently driven with power driving equipment. Driving posts is faster than digging holes and tamping posts in. Driving also results in a stronger

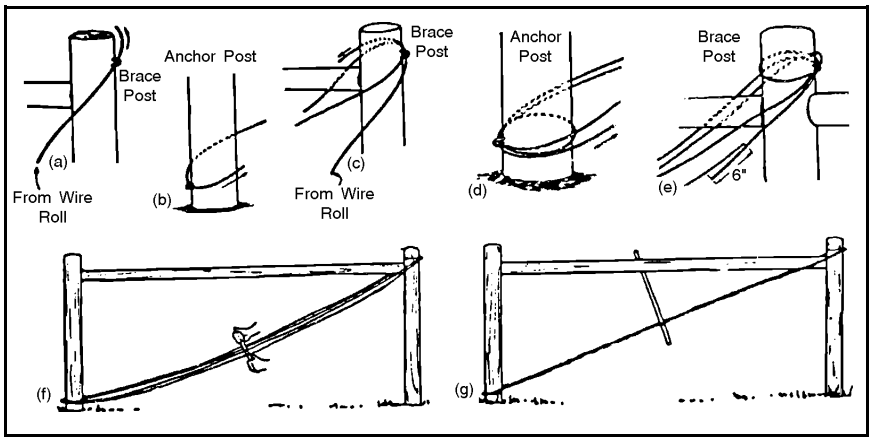


Figure 12. Correct procedure for threading the nine gauge smooth wire used as diagonal in the brace assembly.

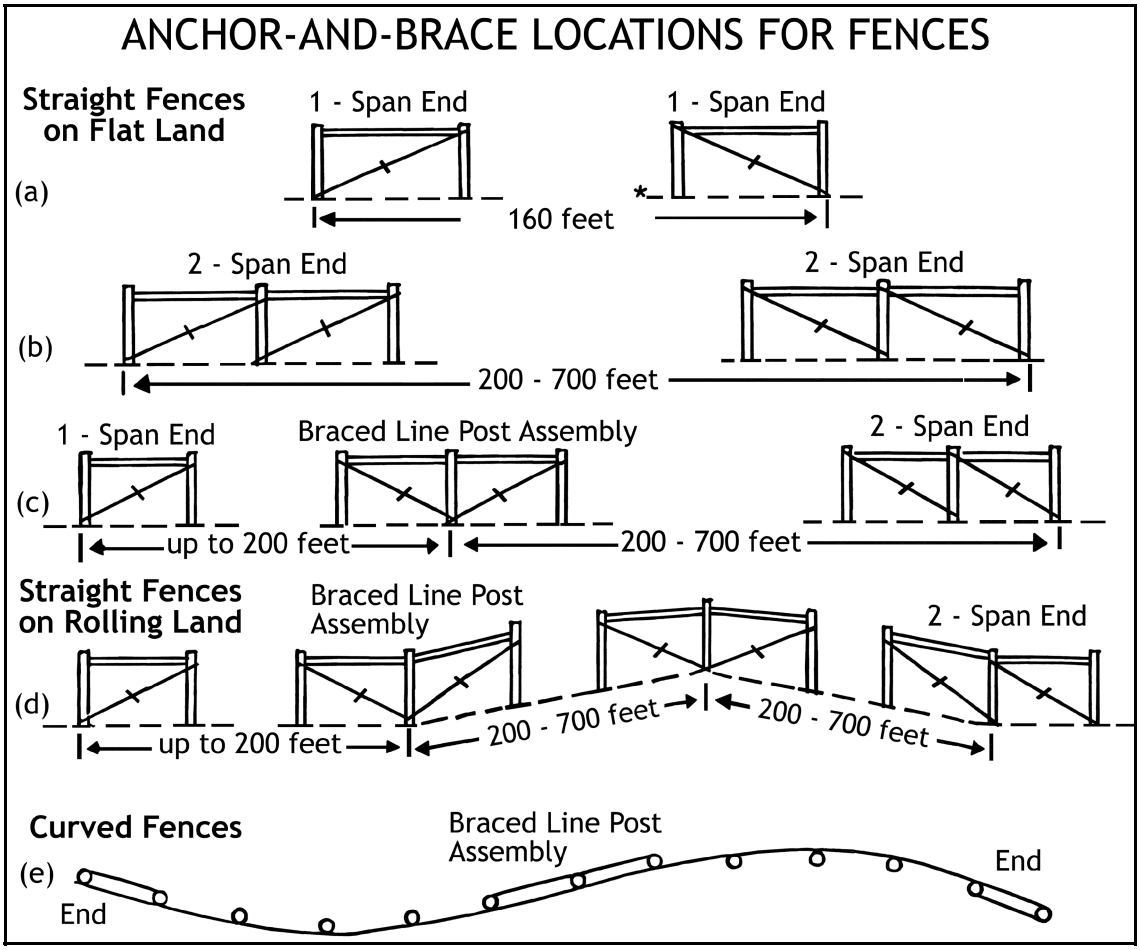


Figure 13. Types of anchor-and-brace assemblies and where to locate them. (a) For fence lengths of 160 feet or less, use single-span end construction. (b) For fence lengths of 200 to 700 feet, use double-span end construction. (c) for fences more than 700 feet long, use a brace-line-post assembly to divide the fence lengths. (d) On rolling land, fence stretching is easier if braced line-post assemblies are located at the foot and top of each hill. (e) Contour fences, more than 350 feet long, should have a braced-line-post assembly installed to keep the stretches to 350 feet or less. Install in straight section at least one post span away from a curve. Don't install on a curve; it won't hold well.

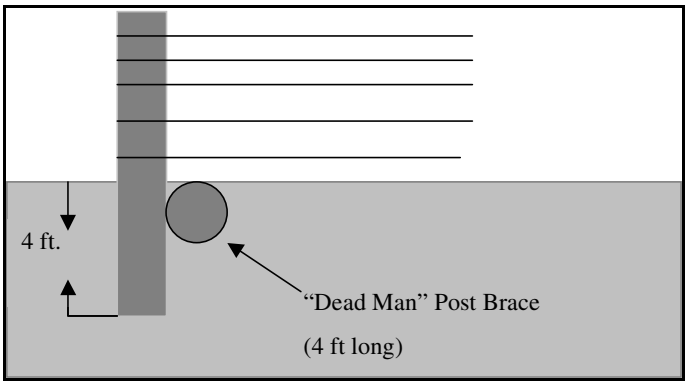


Figure 14. "Dead Man " brace.

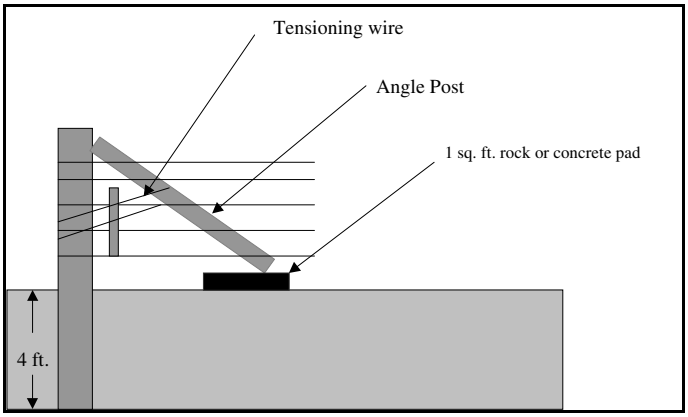


Figure 15. Angle brace.

foundation for the post. Posts should be driven with the small end down. The results may look strange (large end up), but they are much stronger and damage to the post during driving is minimized. Corner posts can be driven as well, but it is sometimes necessary and always advisable to drill a pilot hole about 3 to 4 inches smaller than the post before driving. The pilot hole reduces driving resistance and gives more control over the direction of lean of the post. (End posts should be driven at a slight angle away from the direction of pull so that they will be straight when tensioned.)

When setting posts in holes, center them before tamping. This makes tamping easier and gives the tightest possible soil-pack around the post. Wooden line posts should be set at least two feet deep, preferably deeper. In most soils, studded "**T**" posts need to be driven only until the anchor plate is beneath the surface. For uniform depth, mark the digging tool or steel post to desired depth. A gauge pole, cut to desired length, is handy for spacing posts. Space line posts about 10 to 12 feet apart for most fences. Narrow spacings are better over irregular ground and in contour fences.

## Installing Wire on Fences

In general you will want to install and stretch wire in sections, running from one corner and/or brace post assembly to the next. Always work from the bottom up when installing wire. Install the bottom wire first, then the next highest, etc. Attach wire to the side of the post nearest livestock except where appearance is important. Use galvanized staples or the wire clips that come with steel posts to attach wire to posts. Staples should never be smaller than $1^1/_2$ inches long, preferably $1^3/_4$ or 2 inches. Do not staple the vertical or stay wires of woven wire. Drive staples so the wire is held close to the post but not tight (Figure 16a). The wire should be able to move through the staple to allow expansion and contraction of the wire. Good brace assemblies should keep the wire tight. Driving staples parallel with the grain should be avoided since that will weaken the grip of the wood on the staple. Slash cut staples should be rotated in a certain direction depending on whether the staples are right or left cut (see Figure 16b). Place the staples parallel to the grain and then rotate slightly away from the flat faces of the staple points. This will result in the desired direction of staple penetration (Figure 16c) and a staple that has 40 percent more resistance to withdrawal than staples rotated the wrong way.

## Electric Fence Controllers

One of the best ways of assuring good performance of a fence controller is to provide a good grounding system. The controller grounding system should be separate (at least 30 feet away) from any other driven grounds. Failure to do this could cause stray voltage problems on the farm electrical system. The grounding system should consist of at least 24 feet (usually three 8-foot driven rods spaced 6 feet apart) of ground rod. In addition, a driven ground rod should be placed every 3000 feet (1500 feet in arid climates) of fence and attached to the grounded wires in the fence. Proper grounding will make the job of the charger easier and thus improve its performance. Lightning arresters are available and help protect the controller if the lightning strike is not too close, but will probably not prevent damage by a direct hit. Making the top wire on the fence a grounded wire sometimes helps protect the controller by shunting lightning to the ground instead of through the controller.

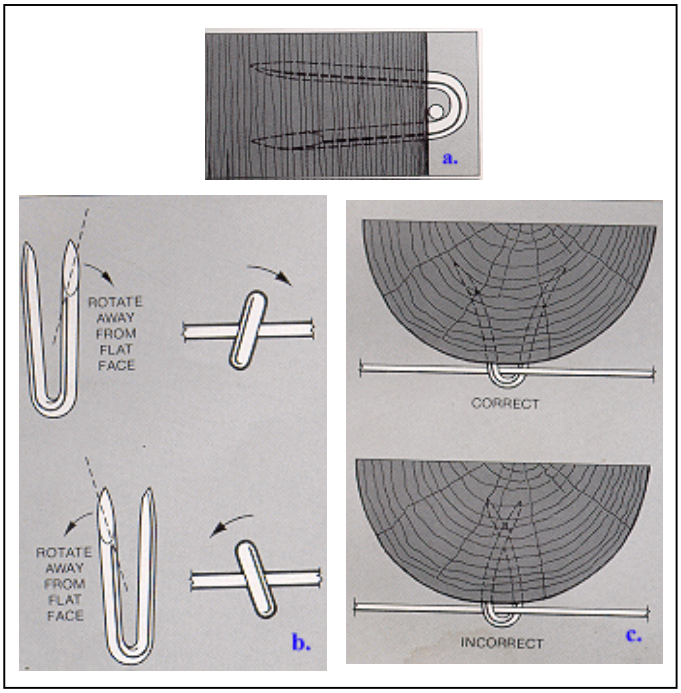


Figure 16. Proper stapling techniques.

## Gates and Cattleguards

You can buy or build gates or cattle guards. Both should be sturdily built and adequately supported. One of the most common (and aggravating) mistakes made when building fences is inadequate bracing of gates which results in gates dragging on the ground. Several plans for gates, man passages and cattle guards are available through your local county extension office.

## Maintenance

A fence that is properly cared for will give long and trouble-free service. Include some of the following suggestions in your regular maintenance program:

- ❒ Repair or replace anchor post assemblies whenever they show signs of weakness.
- ❒ Refasten loose wires to posts and splice broken wires when necessary.
- ❒ Keep the fence wires properly stretched. This will be needed once or twice per year for high-tensile fences.
- ❒ Keep weeds and brush cleared from the fence line, especially on electric fences.
- ❒ Plan and follow a regular inspection routine for any needed maintenance.

# References

*Planning Fences*, American Association of Vocational Instructional Materials, 1980.

*Planning & Building Fences on the Farm*, University of Tennessee Agricultural Extension Service PB 1541, 1996.

1785

**When you have a question ...**

Call or visit your local office of the University of Georgia's Cooperative Extension Service.

You'll find a friendly, well-trained staff ready to help you with information, advice and free publications covering agriculture and natural resources, family and consumer sciences, 4–H and youth development, and rural and community development.

The University of Georgia and Ft. Valley State College, the U.S. Department of Agriculture and counties of the state cooperating. The Cooperative Extension Service offers educational programs, assistance and materials to all people without regard to race, color, national origin, age, sex or disability.

**An Equal Opportunity Employer/Affirmative Action Organization Committed to a Diverse Work Force**

**Circular 774** **Revised February, 2000**

Issued in furtherance of Cooperative Extension work, Acts of May 8 and June 30, 1914, The University of Georgia College of Agricultural and Environmental Sciences and the U.S. Department of Agriculture cooperating.

Gale A. Buchanan, Dean and Director